Dodatok č. 1 k Zmluve o dielo
2D_automatické šablónové pastové zariadenie

ZMLUVA O DIELO

uzatvorená v zmysle § 536 a nasl. Zákona č. 513/1991 Zb. Obchodného zákona
medzi týmito stranami:

Objednávateľ:

Obchodné meno:	**CRT ELECTRONIC s.r.o.**
Sídlo:	č. 1080 029 57 Oravská Lesná - SK
Zastúpený:	Miloslav Czurilla – konateľ Ing.Martin Šipoš – prokurista Dipl. Ing.Blažena Czurillová - prokurista
IČO:	31 634 303
DIČ:	2020427288
IČ DPH:	SK2020427288
Bankové spojenie:	Slovenská sporiteľňa, a.s.
číslo účtu IBAN:	SK46 0900 0000 0000 5417 5033
SWIFT:	GIBASKBX
Poverený jednať vo finančných otázkach a pri riešení sporov:	Ing. Martin Šipoš – riaditeľ
Tel.:	+421 43 55066 36, +421 911 208 911
Fax:	+421 43 55066 99
E-mail:	martin.sipos@crt.sk
Poverený jednať v obchodno-technických otázkach:	František Vrábeľ – projektový manažér
Tel.:	+421 43 55066 63, +421 911 207 911
Fax:	+421 43 55066 99
E-mail:	frantisek.vrabel@crt.sk
Zapísaný:	v Obchodnom registri Okresného súdu Žilina, oddiel: Sro, vložka č. 2800/L

(ďalej aj „objednávateľ" alebo „zmluvná strana")

a

Zhotoviteľ:

Obchodné meno:	**AMTECH, spol. s r.o.**
Sídlo:	Bohuslava Martinů 941/41b, 602 00 Brno
Zastúpený:	Radek Nekarda - jednatel
IČO:	47905085
IČ DPH / DIČ:	CZ47905085
Bankové spojenie:	UniCredit Bank Czech Republic and Slovakia, a.s.
Číslo účtu:	2104173837/2700
IBAN:	CZ76 2700 0000 0021 0417 3837
SWIFT:	BACXCZPP
Poverený jednať v obchodno-technických otázkach:	Nikola Hrbek – sales manager
Tel.:	+420 541 225 215
Fax: -	
E-mail:	nikola.hrbek@amtech.cz
Zapísaný: u KS v Brně, oddíl C, vložka 9119	

(ďalej aj „zhotoviteľ" alebo „zmluvná strana")

Preambula

Zmluvné strany uzatvárajú tento Dodatok č. 1 k zmluve na základe výsledku zadávania zákazky s názvom **Časť 3: „2D_automatické šablónové pastové zariadenie,"** v súlade ustanoveniami Jednotnej príručky k VO a v Metodickom pokyne CKO č. 12 k zadávaniu zákaziek nespadajúcich pod zákon o verejnom obstarávaní.

Zhotoviteľ berie na vedomie, že realizácia predmetu zmluvy podľa čl. I tejto zmluvy bude financovaná na základe uzatvorenej Zmluvy o poskytnutí nenávratného finančného príspevku reg.č. 78/2020-2060-2230-V653 (ďalej aj „zmluva o poskytnutí NFP") v rámci Operačného programu Integrovaná Infraštruktúra, ktorá stanovuje zmluvné podmienky, práva a povinnosti objednávateľa ako prijímateľa nenávratného finančného príspevku (ďalej aj „NFP") a riadiaceho orgánu (Ministerstvo dopravy a výstavby Slovenskej republiky) ako poskytovateľa pri poskytnutí NFP zo strany poskytovateľa prijímateľovi.

I. Predmet Dodatku č. 1 k zmluve

1. Doplnenie zastúpení pre spoločnosť CRT ELECTRONIC s.r.o.
2. Zmena Preambuly – väzba na Jednotnú príručku k VO a v Metodickom pokyne CKO č. 12 k zadávaniu zákaziek nespadajúcich pod zákon o verejnom obstarávaní
1. Doplnená príloha č. 1 k Zmluve_Opis predmetu zákazky s technickými parametrami zariadenia, technický list zariadenia a kompletná konfigurácia zariadenia o preklady originálnych dokumentov v AJ do SJ alebo ČJ
2. Doplnená príloha č. 3 k Zmluve_Zoznam subdodávateľov

II. Ostatné ustanovenia

1. Ostatné ustanovenia Zmluvy o dielo na 2D_automatické šablónové pastové zariadenie z 29.9.2021 zostávajú nezmenené a platné.
2. Tento Dodatok č. 1 nadobúda platnosť dňom jej podpisu oprávnenými zástupcami obidvoch Strán. Dodatok č. 1 k zmluve nadobudne účinnosť iba v prípade kladného výsledku administratívnej kontroly verejného obstarávania, tzn. iba v prípade doručenia Správy z administratívnej kontroly verejného obstarávania, v ktorej Poskytovateľ NFP deklaruje, že neidentifikoval nedostatky, ktoré by mali alebo mohli mať vplyv na výsledok VO alebo v rámci ktorej Objednávateľ súhlasil s výškou ex ante finančnej opravy uvedenej v návrhu správy z kontroly a splnil podmienky na uplatnenie ex ante finančnej opravy podľa MP CKO č. 5.. Po dodržaní tohto postupu Dodatok č. 1 k zmluve nadobudne účinnosť dňom nasledujúcim po dni doručenia právoplatnej správy z kontroly VO Objednávateľovi. V prípade záporného výsledku administratívnej kontroly tejto Zmluvy Poskytovateľom NFP sa zmluvné strany dohodli, že táto zmluva sa od počiatku zrušuje. Zhotoviteľ vyhlasuje, že si neuplatní u Objednávateľa žiadny nárok na prípadnú vzniknutú škodu.
3. Zmenu alebo doplnenie môžu zmluvné strany vykonať výlučne písomným dodatkom k zmluve, podpísaným obidvoma zmluvnými stranami.
4. Dodatok k Zmluve je vyhotovený v dvoch exemplároch, pričom každá zo zmluvných strán obdrží jedno vyhotovenie.

V Oravskej Lesnej, 5.11.2021

Za objednávateľa:

.....

Ing.Martin Šipoš – prokurista

V Brně 5.11.2021

Za zhotoviteľa:

.....

Radek Nekarda – konateľ

Prílohy:

- Zoznam subdodávateľov
- Opis predmetu zákazky s technickými parametrami zariadenia, technický list zariadenia a kompletná konfigurácia zariadenia o preklady originálnych dokumentov v AJ do SJ alebo ČJ

Príloha: Zoznam subdodávateľov

Čestné vyhlásenie Zhotoviteľa

Zhotoviteľ AMTECH, spol. s r.o., Bohuslava Martinů 941/41b, 602 00 Brno, IČO 47905085, čestne vyhlasuje, že celý predmet zmluvy podľa bodu 1 zmluvy o dielo bude realizovať vlastnými zdrojmi bez využitia subdodávateľov.

V Brně, 5.11.2021

Radek Nekarda - konateľ

This document and specifications are the property of ITW EAE and shall not be reproduced or disseminated other than for recipient's use for internal evaluation of ITW EAE's prices and product specifications.

MOMENTUM II 100

Sítotisk*

ENGINEERING DATA SHEET

Contents

Section	Page
I. MACHINE	2
II. POST PRINT INSPECTION - 2D CONTRAST BASE AND ENHANCE (OPTION)	6
III. FRONT MOUNTED AUTOMATIC PASTE DISPENSER (OPTIONAL)	7
IV. BARCODE READERS (OPTIONAL)	10
V. BOARD HANDLING	11
VI. PASTE TEMP MONITORING (OPTIONAL)	12
VII. PRINT PARAMETERS	13
VIII. STENCIL WIPER	14
IX. VISION	16
X. ADJUSTABLE STENCIL SHELF (OPTIONAL)	17
XI. MACHINE PERFORMANCE	18
XII. MACHINE ACCESSORIES	19
XIII. TEMPERATURE CONTROL UNIT (220V, 50HZ, SINGLE PHASE)	21
XIV. TEMPERATURE CONTROL UNIT (220V, 60HZ, SINGLE PHASE)	22
XV .WORKHOLDER DESIGN GUIDE	23
XVI .WORKHOLDER ENGINEERING DRAWING	30
XVII .MOMENTUM II 100 - MACHINE FACILITY DRAWING	31
XVIII .MOMENTUM II 100 - MACHINECENTER OF GRAVITY DRAWING	35

I. MACHINE

STANDARD FEATURES

- CanOpen control architecture for parallel processing
- Ethernet communication
- SMEMA handshake
- Machine Status Light Tower
- Standard, Gemini Light Gray paint color
- 19-inch flat panel display
- SPC Data Collection
- Automatic stencil positioning
- Digital probe with telecentric optics, flash LED lighting and integrated ultrasonic board stop
- Camera Vision Automatic Stencil to Board Alignment System - Look-Up/Look-Down technology ensures board-to-stencil alignment is accurate and repeatable. No moving optical parts guarantee durability and reliability. Flexibility to recognize unlimited number of fiducial image patterns through enhanced vision recognition capabilities
- Patented UltraWipe Programmable Stencil Cleaner - New patented solvent bar delivers maximum control of solvent application increasing yields. Fabric over plenum design reduces maintenance by filtering particles through the fabric. Provides unassisted cleaning of the bottom of the stencil for maximum uptime and increased yields. Improved fabric routing for fast and easy change-over. Low noise Vacuum pump housed within the printer frame.
- Front fixed single tracks
- 3MM board edge clearance capability
- Centernest vacuum capability for substrate hold-down
- Patent Pending Squeegee Head - Motor Driven Squeegee System provides maximum force control. Patent pending "calibration compliance routine" automatically compensates for varying blade length and stiffness to ensure consistent force. Patent pending close loop squeegee option provides the highest level of accuracy and responsiveness.
- Windows 10.0 Operating System

- Benchmark Software - Operační systém Windows 7.0 softwarový standard Speedline "Benchmark", který nabízí stabilitu a snadné použití. Software vyvinutý, testovaný a uvolněný z centrály Speedline. Žádný vývoj třetí stranou zajišťující integritu softwaru. Snadné programování a vestavění softwaroví průvodci zjednodušují a zefektivňují programování a obsluhu. Standardně u všech zařízení Speedline (tiskárny MPM, dávkovače Camalot a pájecí a čisticí stroje Electrovert), což snižuje čas školení operátorů/programátorů. Software BenchMark lze také nahrát do vašeho stolního nebo přenosného počítače pro off-line vytváření receptur.
- Quick Release Squeegee – Allows for quick and easy removal of blades with a simple thumb driven mechanism. Eliminates the thumb screws. Less than 20 second changeover time.
- Remote Tech Diagnostic Service Package (12 Months)

I. MACHINE (Continued)

OPTIONS.

- Adjustable Stencil Shelves (29 in x 29 in to 23 in x 23 in stencils)- allows both cast and tubular frames that have an Outside Dimension of 23" or greater to be used with no adapters. State-of-The Art system has the shelves on linear bearings with an air-brake for easy adjustability
- Automatic Paste Dispenser - industry-standard sealed cartridges release precise amounts of solder paste, adhesives, or flux, as a clean bead across the stencil.
- Barcode Reader - Provides product traceability and process verification. A machine mounted scanner reads and stores board data from anywhere on the substrate to provide traceability for SPC. A handheld scanner is offered to scan stencils, paste, blades, tooling, boards, and pump size to provide process verification and prevent entry into production if incorrect materials are scanned.
- Programmable Squeegee - Independent direct motor-driven lead screws for front/rear axes and an integrated compliance routine for accurate application of desired force, regardless of variations in squeegee type, length or thickness.
- Post Print Inspection - Contrast based 2D solder paste-on-pad inspection, bridge detection and under stencil inspection to increase quality and yield. New Speed Vision with raster motion design delivers high speed inspection maximizing throughput. Inspection results are quantified to the component pad level and on-board SPC makes analysis clear and precise. Speedline's patented texture based inspection sees paste between pads and surrounding stencil apertures to prevent defects.
- Rapid View Inspection System - Up to three and a half times faster than Speedline's standard system. Inspection can be device or area driven, where each device or area can have its own accept/reject levels and inspection priorities and is also capable of stopping on the first reject found. Inspection sites can be taught at the printer or through Gerber data (using Gerber EZ Teach) or through CAD data (using Aegis' CircuitCam). Can teach devices of any angle or solder paste shape. Bridge detection, pad coverage, and paste transfer functions can also be done simultaneously without any speed degradation. Simple error reporting identifies the worst error for quick go/no go capability while still allowing users to jump to other locations as desired. SPC data is collected and stored for each device or area, allowing for more in-depth analysis.
- IR Light - Enhances the scope of fiducial recognition and 2D inspection with OSP boards.
- Temperature and Humidity Control Unit

  Temperature Control Unit (CE Version)

Copyright 2018 ITWEAE

I. MACHINE (Continued)

- SPECIFICATIONS - PHYSICAL

Specification	Description	Model
Weight (Crated)	1090.5 kg (2404 lbs)	MOMENTUM II 100
Weight (Uncrated)	797 kg (1757 lbs)	
Height (Excluding Light Tower)	*1594 mm (62.7") at 940 mm (37.0") transport height*	
Depth	1423.5mm (56.04")	
Width	1195.4mm (47.08")	
Ground Clearance	Standard Height - 127 mm (5.0") Adjustable from 152.4 mm (6.0") to 177.8 mm (7.0") corresponding to SMEMA transport conveyor height	

Copyright 2018 ITWEAE

I. MACHINE (Continued)

DIMENSIONS AND FLOOR SPACE REQUIREMENTS

Install the MOMENTUM II 100 in a clean, dust-free environment to ensure proper operation. In addition, the installation area should provide a clearance of 2 ft (0.6 meters) around to provide adequate space for service. Refer to the facility layout drawing for machine dimensions.

FACILITY REQUIREMENTS

Napájení	200 - 240VAC (± 10%) @ 50/60 Hz, 15A
Vzduch (čistý, suchý)	100 psi @ 4 cfm (standartní provoz) až 18 cfm (vakuum) (7 bar @ 5L/s to 12L/s), 12.7 mm (0.5") OD x 9.5 mm (3/8") ID line
Minimum Front Clearance	508 mm (20.0")
Minimum Rear Clearance	508 mm (20.0")

SPECIFICATIONS - OPERATIONAL

Ambient Operating Temperature	18°C to 35°C (64°F to 95°F)
Ambient Operating Relative Humidity	30% to 75% Non-Condensing
Maximum Noise Emissions	78 dB(A)
Operating AC Current Load	6 axes cycling - 3.5 ampsrms 6 axes cycling plus worknest vacuum blower - 9.5 ampsrms Machine Idle - 1.7 ampsrms

Copyright 2018 ITWEAE

MPM
Electronic Assembly Printers IT EAE

II. POST PRINT INSPECTION - 2D CONTRAST BASE AND ENHANCE (OPTIONAL)

SPECIFICATIONS

Minumální velikost plošky (Square). Based on Board Quality	0.254 mm (0.010")
Maximální velikost plošky	7.0 mm (0.275")
Speed vs Feature Size	No Restrictions
Device Angle	No Restrictions
Custom Device Capable (Devices Do Not Require a Consistent Pitch)	
Specific Device or Area Driven	
Min, Max, and Average Values for Each Device and Inspection Technique Collected in SPC Data	
Ability to Use Gerber Data (Via Speedline's Gerber EZ Teach) and CAD Data (Via Aegis' CircuitCam)	

Copyright 2018 ITWEAE

MPM
Electronic Assembly Printers IT EAE

FRONT MOUNTED AUTOMATIC PASTE (OPTIONAL)

SPECIFICATIONS

Cartridge Sizes	177 ml (6 oz)
Maximální délka v X	609.6 mm (24") v X ose
Maximum Stroke Speed	50.8 mm/sec (2"/sec)

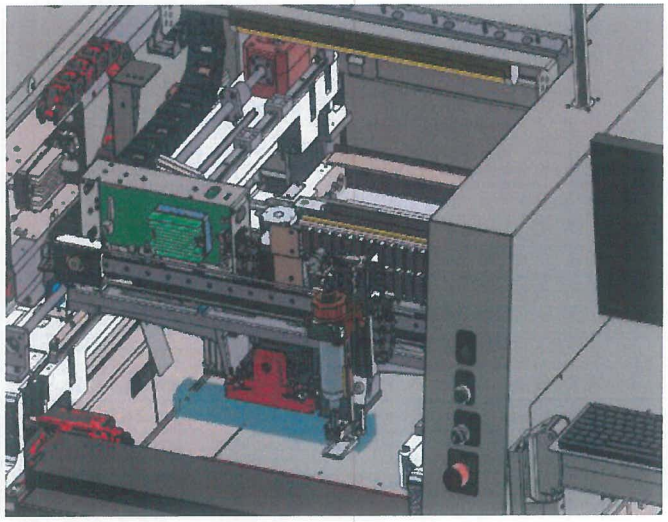

FRONT MOUNTED AUTOMATIC PASTE (OPTIONAL)

SPECIFICATIONS

Front Mounted Single Jar Dispenser:

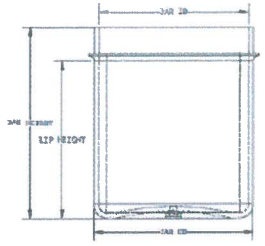 Jar Sizes	500 Gram Column shape Jar ID: 57.1~57.7mm Jar OD: 58~60mm Lip height: 56~59mm Jar height: 69~73mm
Stroke Distance	525mm (20.7') in X direction
Maximum Stroke Speed	50.8 mm/sec (2"/sec)

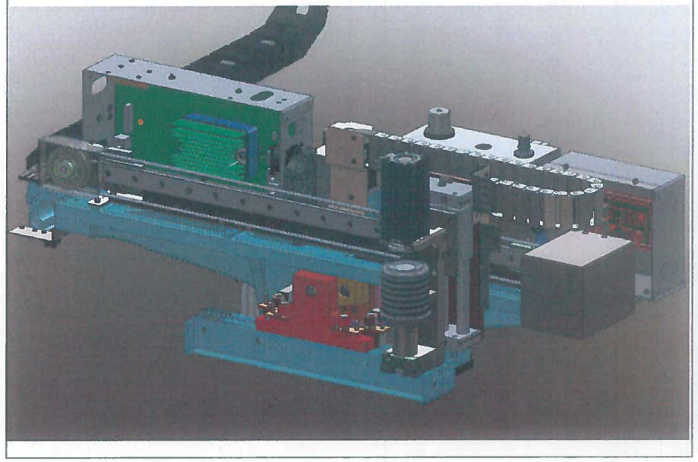

III FRONT MOUNTED AUTOMATIC PASTE (OPTIONAL)

SPECIFICATIONS

Front Mounted Dual Jar Dispenser:

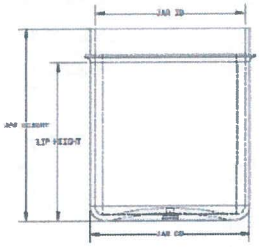 Jar Sizes	500 Gram Column shape Jar ID: 57.1~57.7mm Jar OD: 58~60mm Lip height: 56~59mm Jar height: 69~73mm
Stroke Distance	450 mm (17.7") in X direction
Maximum Stroke Speed	50.8 mm/sec (2"/sec)

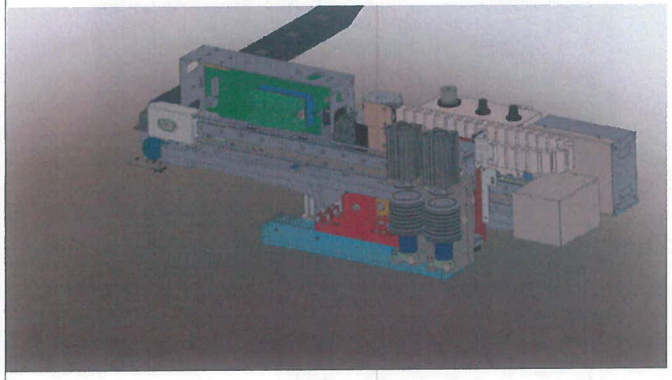

Copyright 2018 ITWEAE.

IV. BARCODE READERS (OPTIONAL)

SPECIFICATIONS

2D Handheld	Traceability and Verification
Externally Mounted, Fixed 2D	Board Traceability

Handheld Scanner

Copyright 2018 ITWEAE.

V. BOARD HANDLING

SPECIFICATIONS

Board Hold-Down	Fixed top clamps Centernest vacuum (high flow and/optional Venturi)
Transport Conveyor Speed	50.8 mm - 1270 mm/second (2" - 50"/second)
Velikost DPS, Maximum (X x Y)	610 mm x 510 mm (24" x 20") NOTE: A dedicated workholder is required for boards with an X size greater than 20"
Velikost DPS, Minimum (X x Y)	50.0 mm x 50.0 mm (2" x 2")
Board Support Methods	Centernest Vacuum Magnetic pins Support blocks Vacuum pins Optional Dedicated Fixtures (Tool-less) Optional Quik-Tool
Tloušťka	0.2 mm (0.008") až 5.0 mm (0.20")
Váha DPS, Maximum	4.5 kg (9.92 lbs)
Clearance, Board Edge	3 mm (0.118")
Clearance, Top Edge	0 - 3 mm (0 - 0.118") (Based on options)

Copyright 2018 ITWEAE

Světlá výška, spodní	12.7 mm (0.5") standard. Konfigurovatelná až 25.4 mm (1.0")
Track Parallelism	0.254 mm (.01")
Centernest Vacuum	Standard

VI . PASTE TEMPERATURE MONITORING (OPTIONAL)

SPECIFICATIONS

Paste Cartridge Temperature Measurement	Measures the temperature of the cartridge surface at the bottom of the cartridge to determine paste temperature
Paste on Stencil Temperature Measurement	Measures the temperature of the paste bead on the stenci
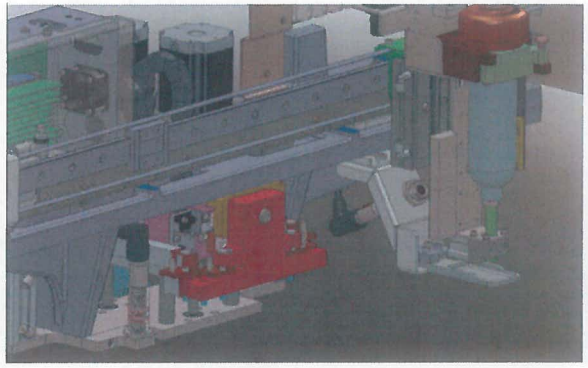	

Copyright 2018 ITWEAE

VII. PRINT PARAMETERS

SPECIFICATIONS - PROGRAMMABLE AND CLOSED LOOP SQUEEGEES

Maximální oblast tisku (X x Y)	609.6 mm x 508 mm (24" x 20")
Print Gap (Snap-Off)	0 mm to 6.35 mm (0" to 0.25")
Rychlost tisku	0.635 mm/s - 304.8 mm/s (0.025 in/s - 12 in/s)
Print Force	0.0 kg - 22.7 kg (0.0 lbs - 50.0 lbs)
Velikost rámu	737 mm x 737 mm (29" x 29") Pro měnší síta možné adaptéry. Nastavitelná rám na šablonu pro vnější průměr 584,2 mm x 584,2 mm (23" x 23") rámy a více. Rámy pod 584,2,8 mm x 584,2 mm vyžadují rámový adaptér. Viz Adaptéry šablon níže XI. MACHINE ACCESSORIES
Squeegee Travel	-302.7 mm to 302.7 mm (-11.917" to 11.917")
Squeegee Blade Length	200mm (7.9") Trailing Edge Metal Assembly 250mm (9.8") Trailing Edge Metal Assembly 300mm (11.8") Trailing Edge Metal Assembly 350mm (13.8") Trailing Edge Metal Assembly 400mm (15.7") Trailing Edge Metal Assembly 450mm (17.7") Trailing Edge Metal Assembly 500mm (19.7") Trailing Edge Metal Assembly 550mm (21.7") Trailing Edge Metal Assembly 610mm (24") Trailing Edge Metal Assembly

Copyright 2018 ITWEAE

VIII. STENCIL WIPER

SPECIFICATIONS

Wiper Fabric	
Fabric Width	254 mm - 609.6 mm (10" - 24") 457 mm (18") Maximum with Adjustable Stencil Shelves) Not restricted by solvent distribution
Roll Diameter	19.05 mm +/- 0.508 mm ID x 63.5 mm Max OD (0.75" +/- 0.02" ID x 2.5" Max OD)
Wiping Speed	101.6 mm/s (4"/s) Maximum
Maxcimální oblast čištění	609.6 mm x 508 mm (24" x 20") oblast DPS
Solvent Tank Capacity	Total Volume - 2 liters (0.528 gallons)
Recommended Solvents	See list below

Copyright 2018 ITWEAE.

Doporučené čistidla

Speedline technologies

APPLICATION NOTE

Issue Date: February 2013

SOLVENT STUDY RELEASED — Accela/Momentum/MPM 125

Speedline MPM has completed a study on solvents that are available to use in stencil wiper solvent systems. Until now there have been a small number of solvents that have been deemed safe to use. This was due to the fact that a majority of the solvents that are available on the market today have extremely low flash points or have been found to cause deterioration to our solvent system.
The acceptance criteria for solvents to be used in the Speedline MPM stencil wiper solvent systems, is as follows:

Minimum Flash Point: 100 degrees F

Non deteriorating to plastics

Minimal Odor

The following solvents have been tested and found to be acceptable for solvent dispensing

MANUFACTURER	PRODUCT	EST. F. POINT	CONTACT #
Kyzen	Ionox 13400	170 F	615 - 831 – 0888
Kyzen	Ionox 13419*	142 F	615 - 831 – 0888
Kyzen	Ionox 13418*	127 F	615 - 831 – 0888
Kyzen	Ionox 13416*	142 F	615 - 831 – 0888
Kyzen	Cybersolv C8622*	None	615 - 831 – 0888
Kyzen	Exaklean E5612*	None	615 - 831 – 0888
Techspray	Eco-Stencil	204 F	806 – 372 - 8523
Zestron	Vigon SC 200	None	703 – 589 - 1198
Zestron	Zestron SD 300	106 F	703 - 589 - 1198
Zestron	Zestron VD	143 F	703 - 589 - 1198
Zestron	Zestron SD 100	108 F	703 - 589 - 1198
Zestron	Zestron SW	153 F	703 – 589 – 1198
Zestron	Vigon UC 160	None	703 – 589 - 1198
EMS GMBH & Co	Puran SC	104 F	49-2401- 9193-0
Promosol	TOPKLEAN EL-7	140 F	33-1-49-835300
Kolb	WipeEx SA 120	248 F	49- 2154-9479-38
Kiwoclean	EL 8150	None	49(0)6222-578-164

Speedline MPM recommend that our customers replace the tubing that runs from the vacuum plenum to the filter after every two years of service.

Copyright 2013 Speedline Technologies Inc. All rights reserved.
*compatibility test conducted at Kyzen

IX VISION

SPECIFICATIONS

Fiducials Types	Standard shape fiducials (see SMEMA standards), pad/aperture
Fiducial Size	Minimum - 0.1 mm x 0.1 mm (0.003" x 0.003") Maximum - 7 mm x 7 mm (0.275" x 0.275")
Maximum Number of Fiducials	15
Camera System	Single digital camera - MPM patented lookup/down vision
Camera Resolution	16.8 microns/pixel
Physical Dimensions	Horizontal Pixels - 652 Vertical Pixels - 494 Pixel Size - 7.4 um x 7.4 um Scanning Area - 4.87 mm x 3.65 mm Aspect Ratio - 4:3 Color Format - Grayscale
Viewing Area	10 mm x 8 mm (0.39" x0.31")
Field of View	10 mm x 8 mm (0.39" x0.31")
Teach Window Area	10 mm x 8 mm (0.39" x0.31")

X ADJUSTABLE STENCIL SHELF (OPTIONAL)

SPECIFICATIONS

Frame Types Accepted	Cast and Tubular
Frame Size	584.2 mm x 584.2 mm (23" x 23") Outer Dimension (or greater)

Copyright 2018 ITWEAE.

XI. MACHINE PERFORMANCE

SPECIFICATIONS

Celkové zarovnání systému ± 11 mikro	
Přesnost a opakovatelnost	± 11 microns (± 0.000433") při 6 sigma, Cpk větší nebo rovno 2.0
Čištění ± 17 mikro	
Přesnost a opakovatelnost	± 17 microns (± 0.000669") při 6 sigma, Cpk větší nebo rovno 2.0*
Čas cyklu	
MOMENTUM II 100	11.0 sekund

Copyright 2018 ITWEAE.

XII. MACHINE ACCESSORIES

DESCRIPTIONS

Off-Line Programming Tools	
Gerber Tools (2D Teach Only)	Speedline's Gerber EZ Teach
	Speedline's Gerber EZ Teach Import (for each additional printer)
Aegis Tools (Complete Off-Line Programming)	Off-line Programming Machine Interface
	CircuitCAM Interface (Single CAD Type)
	CircuitCAM Interface (All CAD Types)
Podpora DPS	39mm Vakuové boční uchycení Detekce nárazu Dedikované fixtury Grid-Lok systém Quik-Tool systém (včetně Detekce nárazu) Univerzální nástroj (20 pinů + 12 bloků) Vakuové piny
Top Clamp Foils	.004 Thick with 3.5mm extension .004 Thick with 2.0mm extension
Vacuum Wiper Fabric	10" (254 mm), 39ft length 14" (355.6 mm), 39ft length 18" (457.2 mm), 39ft length 24" (609.6 mm), 39ft length
Vacuum Wiper Plenum	10" (254 mm) 14" (355.6 mm) 18" (457.2 mm) 24" (609.6 mm)
Spares Kits	MOMII-100-L1-SPARE
	MOMII-100-L2-SPARE

Copyright 2018 ITWEAE

MPM
Electronic Assembly Printers IT EAE

XII. MACHINE ACCESSORIES (Continued)

DESCRIPTIONS

Remote Diagnostics	Printer comes with first year of Remote Tech, Diagnostics **Note:** Requires Internet access at the equipment. For more information: Go to: www.speedlinetech.com, arrow over to *Products* and select *Software* from the pop-up menu. Or e-mail: Mpm_tsc@speedlinetech.com
Additional Squeegee Blades	200mm (7.9") Trailing Edge Metal Assembly 250mm (9.8") Trailing Edge Metal Assembly 300mm (11.8") Trailing Edge Metal Assembly 350mm (13.8") Trailing Edge Metal Assembly 400mm (15.7") Trailing Edge Metal Assembly 450mm (17.7") Trailing Edge Metal Assembly 500mm (19.7") Trailing Edge Metal Assembly 550mm (21.7") Trailing Edge Metal Assembly 610mm (24") Trailing Edge Metal Assembly
Workholders	See the Workholder Design Document See the Workholder Mounting Drawing

Copyright 2018 ITWEAE

MPM
Electronic Assembly Printers IT EAE

XIII. TEMPERATURE CONTROL UNIT (220V, 50HZ, SINGLE PHASE)

NOTES UNLESS OTHERWISE SPECIFIED:
1. ALL DIMENSIONS ARE FOR ENGINEERING REFERENCE ONLY
2. SPECIFICATIONS:
Cooling Capacity : 2500Kcal/hr
Refrigerator : R22
Voltage : 220V, 1PH, 50HZ
Compressor : 0.75Kw
Blower Motor : 0.25Kw
Condenser Fan Motor : 0.15Kw
Air Flow : 540 m3/hr
Pipe Size for Air Outlet : Ø150mm
Air Temperature : 20 - 30° C
Stability : ±2° C
Heater : 3KW
Dimension : L664*W664*H1020mm
3. 150MM BAFFLE KIT
8 FT 150MM HOSE

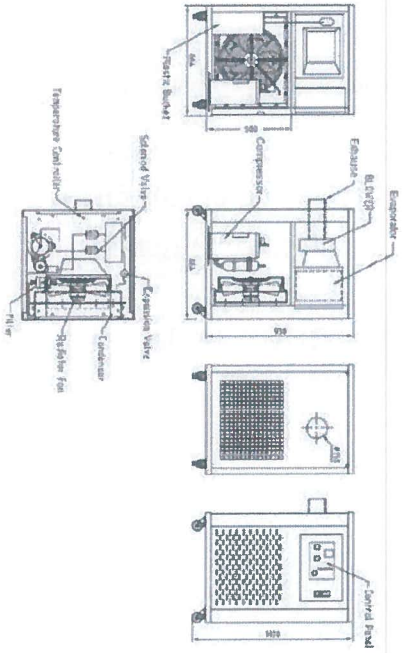

XIV. TEMPERATURE CONTROL UNIT (220V, 60HZ, SINGLE PHASE)

NOTES UNLESS OTHERWISE SPECIFIED:
1. ALL DIMENSIONS ARE FOR ENGINEERING REFERENCE ONLY
2. SPECIFICATIONS:
Cooling Capacity : 2500Kcal/hr
Refrigerator : R22
Voltage : 220V, 1PH, 60HZ
Compressor : 0.75Kw
Blower Motor : 0.25Kw
Condenser Fan Motor : 0.15Kw
Air Flow : 540 m3/hr
Pipe Size for Air Outlet : Ø150mm
Air Temperature : 20 - 30° C
Stability : ±2° C
Heater : 3KW
Dimension : L664*W664*H1020mm
3. 150MM BAFFLE KIT
8 FT 150MM HOSE

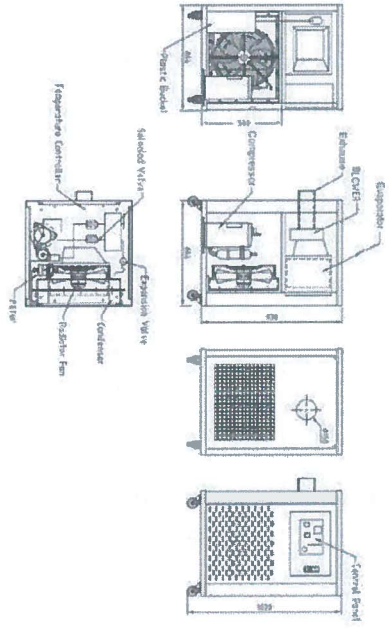

Momentum WorkHolder

- Mounting location
- Design Guide
- Usage:
  - Dedicated board or process
  - Board X dimension greater than 20”

Copyright 2018 ITWEAE

MOMENTUM II 100 WorkHolder – Mounting

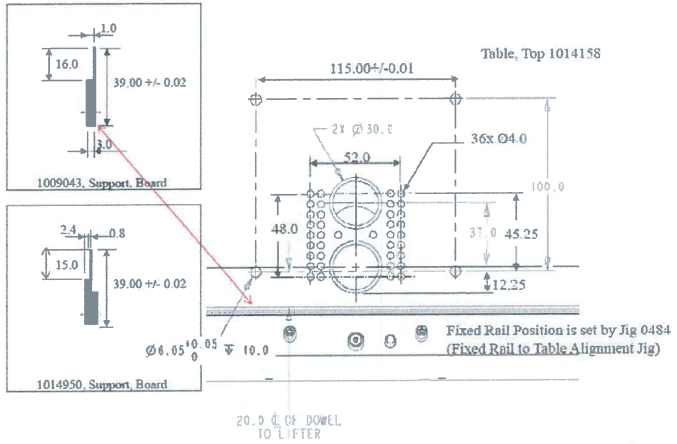

Copyright 2018 ITWEAE

MOMENTUM II 100 WorkHolder – Design Guide

a) Height of workholder: 39mm +/- 0.02.

b) Workholder X Size: 0.5" to 1.5" longer than board at each end and it overall length should equal to recommended squeegee blade length.

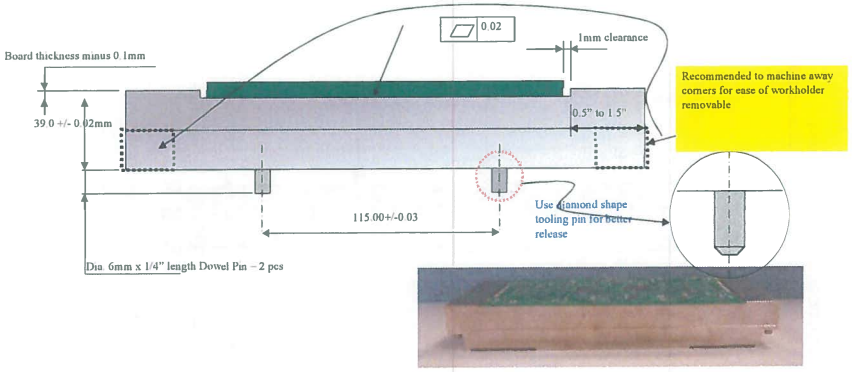

Copyright 2018 ITWEAE

MPM Electronic Assembly Printers IT E-AE

MOMENTUM II 100 WorkHolder – Design Guide

- Workholder Y Size: Board Y minus "Edge clearance spec. minus 1 mm" on each side (Based on remove of 1014950, Support, Board).
  - Example For board with Y size equal to 100.
    - Tooling width equal to 96mm with 3mm edge clearance machine.
- Vacuum hole opening should be as much as possible with +/- 1mm clearance in X, Y & Z direction.
- Vacuum suction strength should be equal and sufficient to hold the board thru out the workholder to avoid board movement after vacuum hold down.

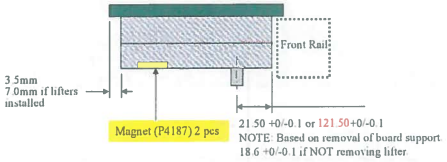

Copyright 2018 ITWEAE

MPM Electronic Assembly Printers IT E-AE

Tooling Example: Board ABC with 3mm Edge Clearance

a. Thickness: 2.14mm
   - X: 20.97" or 532.6mm
   - Y: 5.375" or 136.53mm

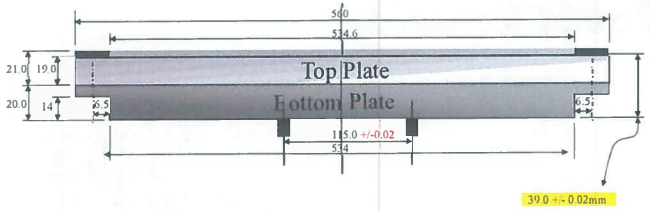

Top Plate

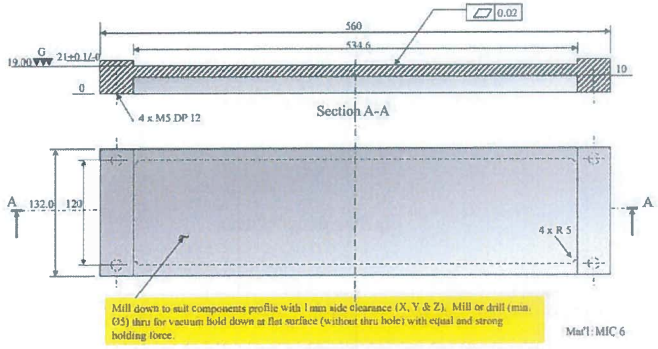

XV. WORKHOLDER DESIGN GUIDE

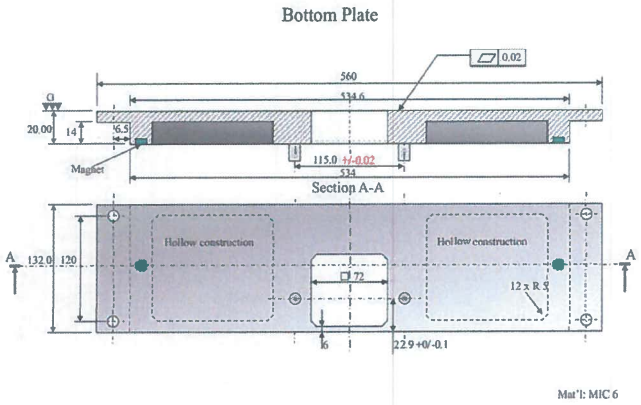

Copyright 2018 ITWEAE

XVI. WORKHOLDER ENGINEERING DRAWING

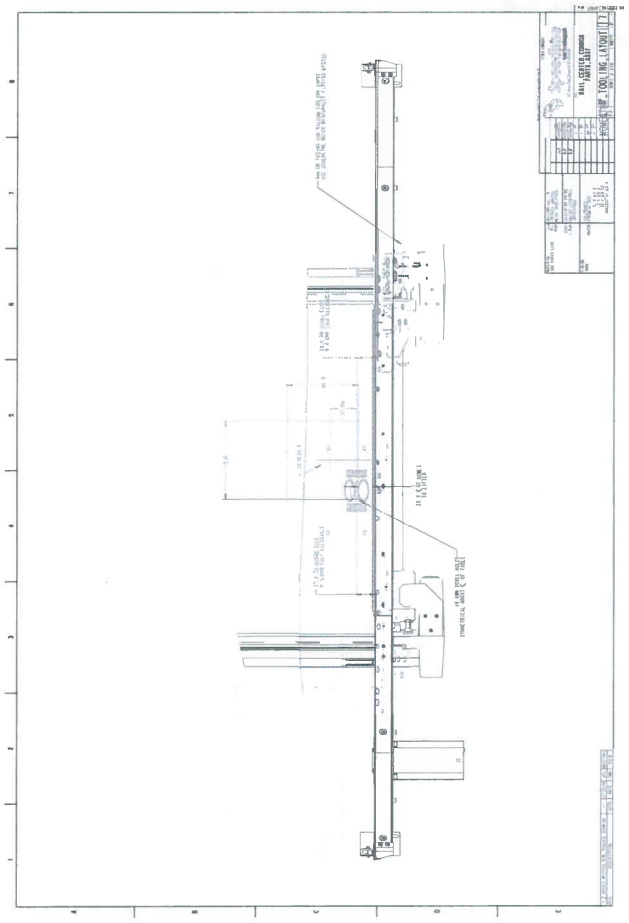

Copyright 2018 ITWEAE

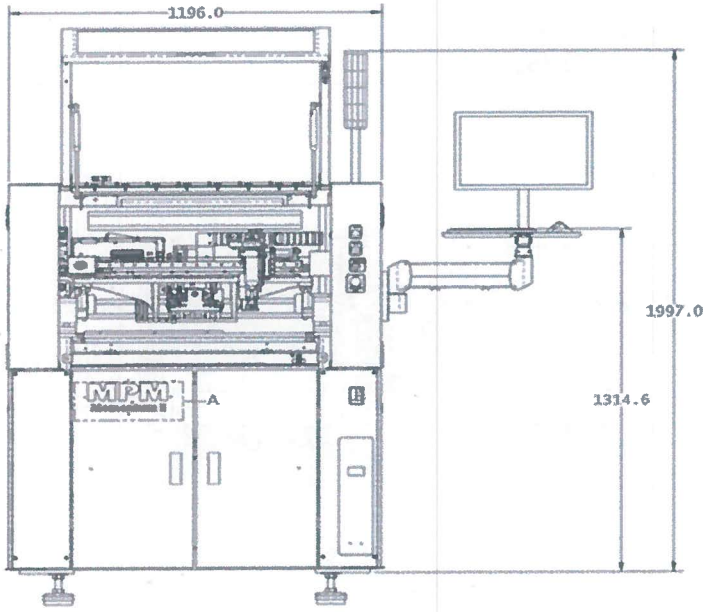

Copyright 2018 ITWEAE

XVII. MOMENTUM II 100- MACHINE FACILITY DRAWING

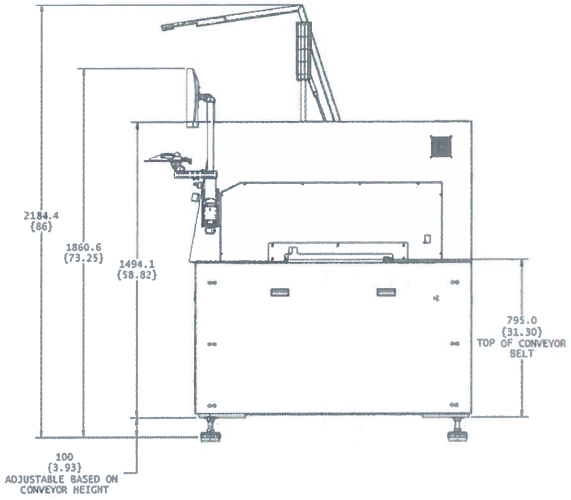

EDS – MOMENTUM II 100
Rev C
Copyright 2018 ITWEAE

XVII. MOMENTUM II 100- MACHINE FACILITY

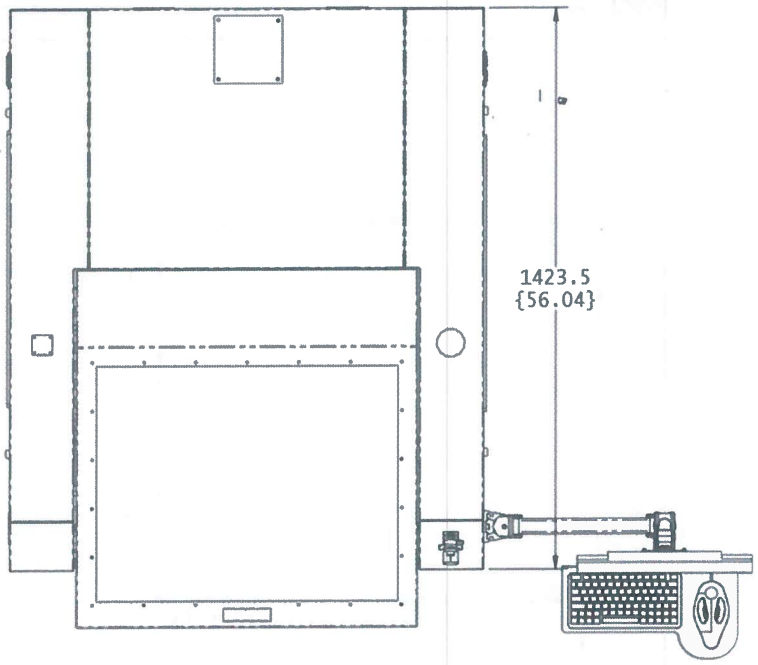

Copyright 2018 ITW EAE

XVII. MOMENTUM II 100- MACHINE FACILITY

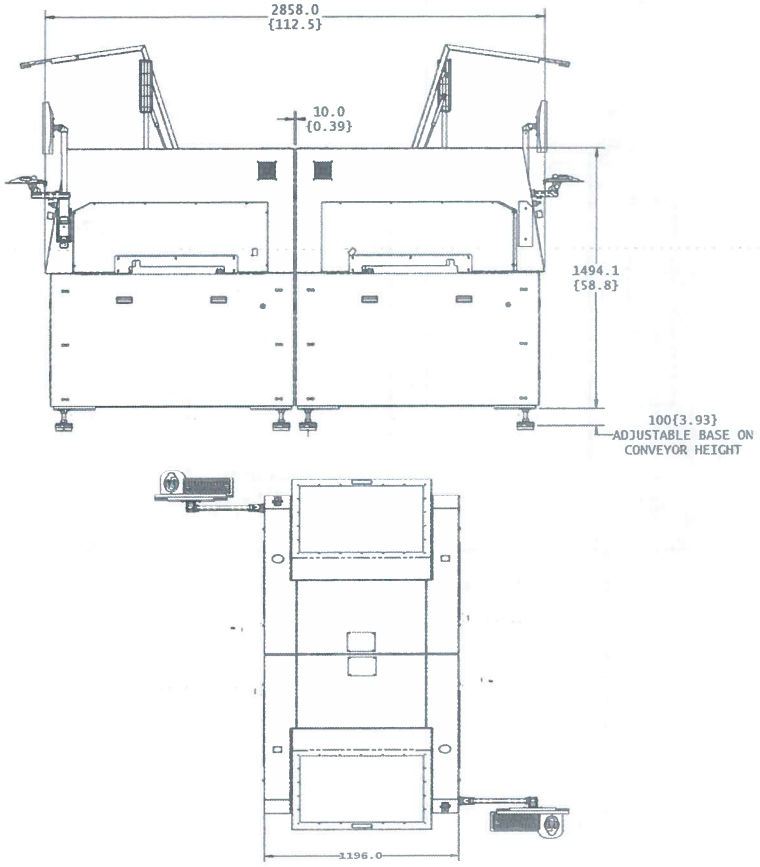

EDS – MOMENTUM II 100
Rev C
Copyright 2018 ITW EAE

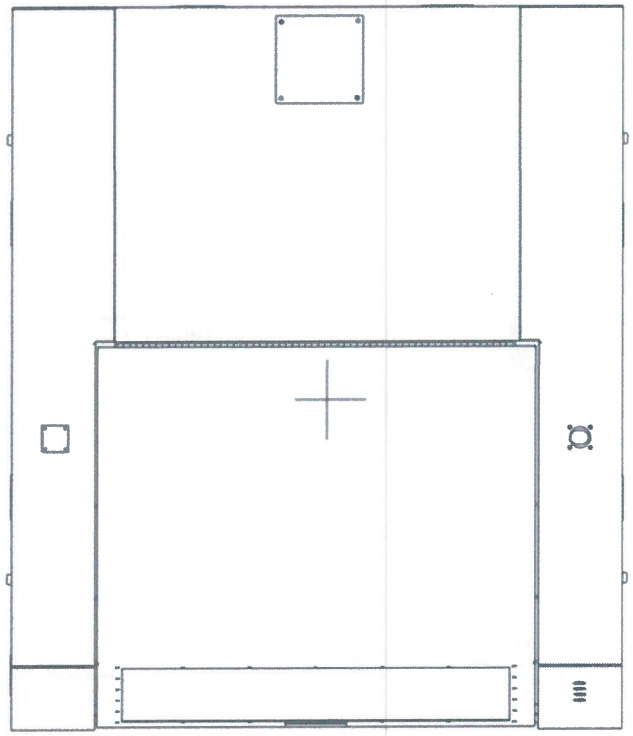

Copyright 2018 ITWEAE

XVIII MOMENTUM II 100 - MACHINE CENTER OF GRAVITY DRAWING

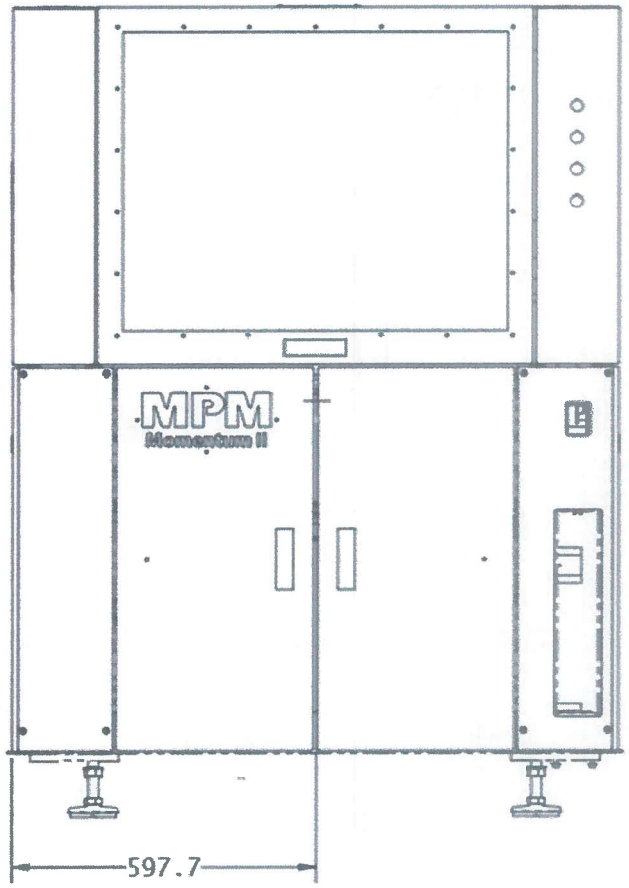

Copyright 2018 ITWEAE

XVIII MOMENTUM II 100 - MACHINE CENTER OF GRAVITY DRAWING

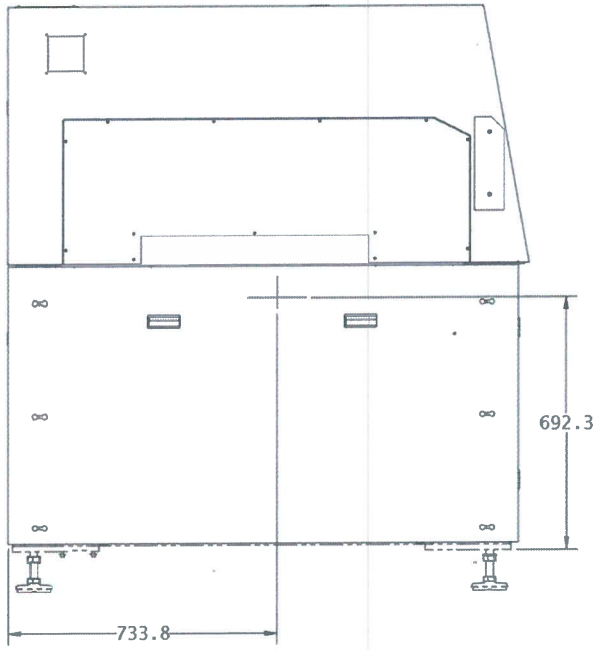

Copyright 2018 ITW EAE